AC9-03.27/AC12-03.27/AC15-03.27

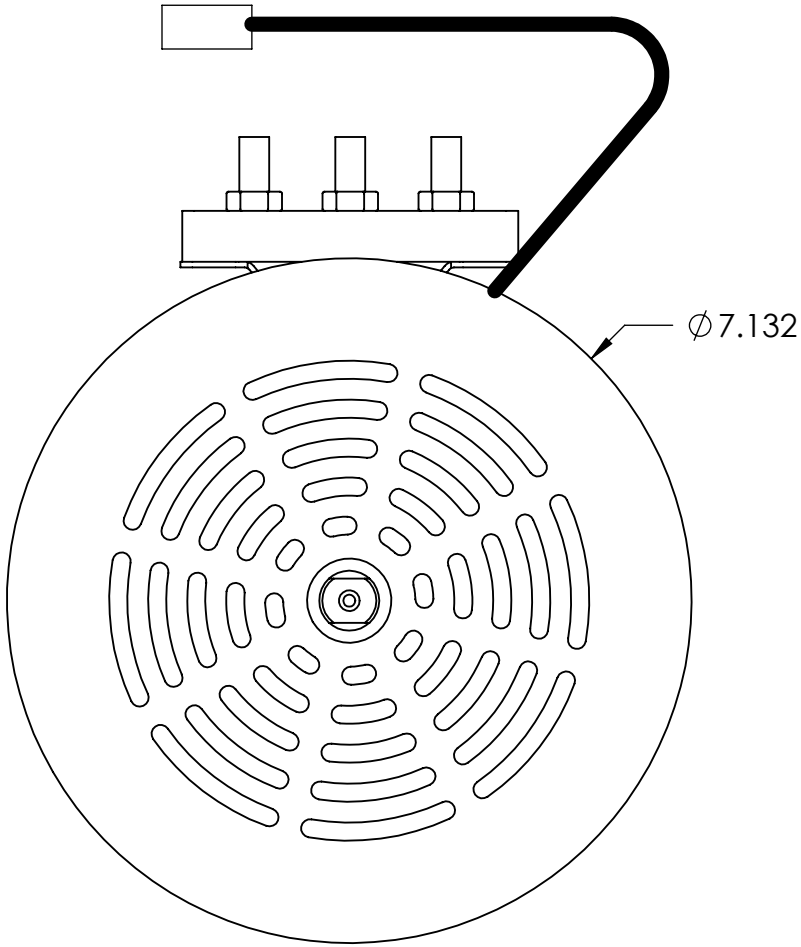

ENCODER END

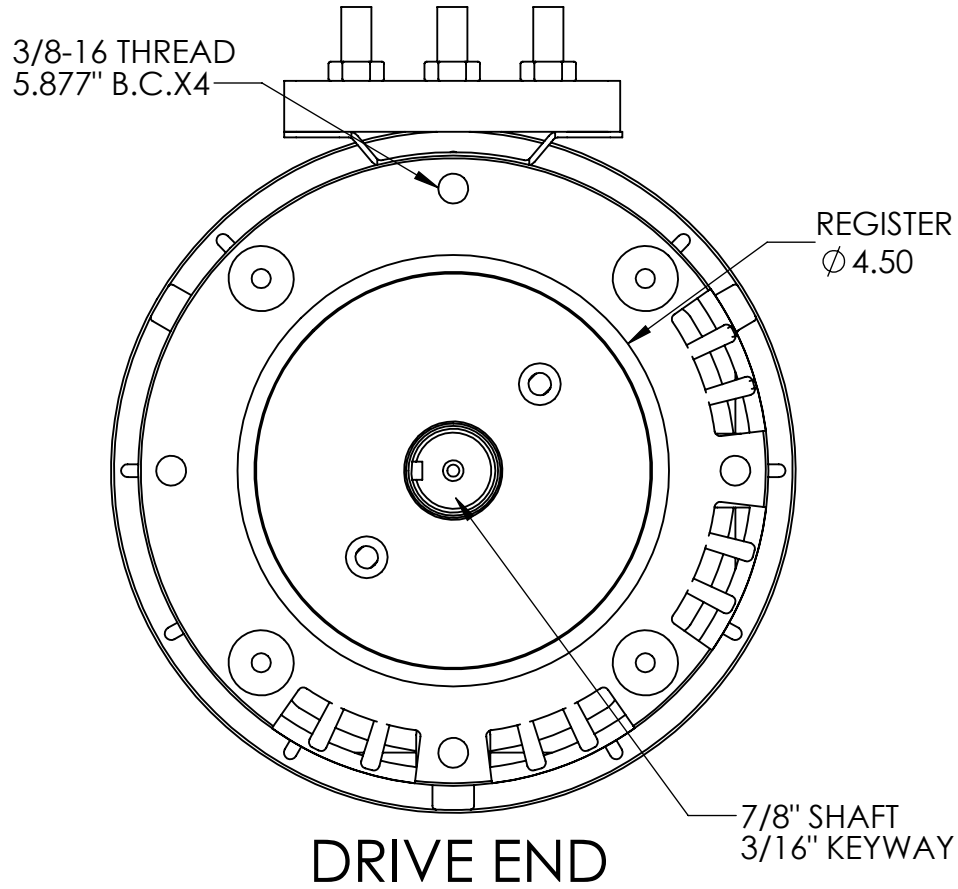

DRIVE END

AC9-03.27 Encoder Cables
1=Original style with Molex Connector, Enc-002
3= New Style golf car with 6 pin Duetsch DTM series connector, 1010-HP-001 encoder cable
AC12-03.27 Encoder Cables
1=Original style with Molex Connector, Enc-002
AC15-03.27 Encoder Cables
1=Original style with Molex Connector, Enc-002
2= Original Miles style with 6 pin Duetsch DT Series connector, AC31-Encoder cable